LGH
THE LIFTING EXPERTS

OPERATION MANUAL

(800) 878-7305 Rentals@RentLGH.com RentLGH.com

CALDWELL
LIFTING SOLUTIONS

LIF-TRUC™

INSTRUCTION MANUAL

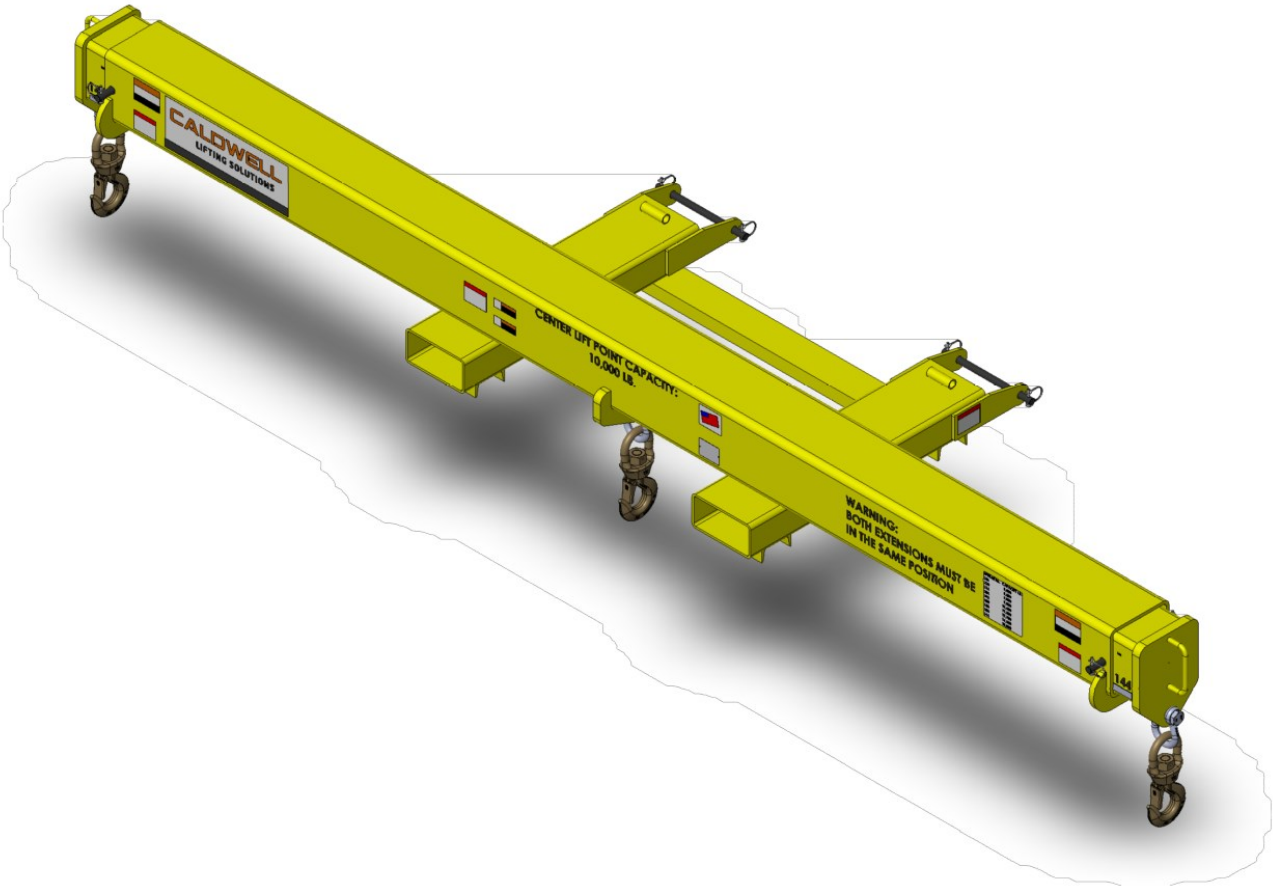

Model Number: 15S-5-144/240

Telescoping Fork Beam

Date: November 2024

PREFACE

Your new Caldwell product handles a load up to its rated capacity and load size limits. It is designed to perform specific tasks and to withstand forces based on lifting equipment design principles.

The installation, operation, and maintenance instructions in this manual are typical of your product. The safety information listed in this manual is not all inclusive. The owner or user is responsible for understanding and acting according to industry safety standards and any location, city, state, and federal safety regulations.

⚠WARNING

All qualified persons responsible for assembly, disassembly, operation, inspection, and maintenance shall read and understand all contents of this manual to avoid serious injury, death, or property damage. Keep this manual.

The lift truck capacity is affected by the load weight, beam weight, and beam spread. Whenever an attachment is used with a lift truck, the lift truck capacity changes and may be less than capacity shown on attachment. Consult lift truck nameplate.

Order Description

- Capacity at center: 10,000 lbs.
- See final drawing for spreads/capacities
- Includes: (3) 4-3/4 ton shackles & (3) 5 ton swivel hooks, 1 centered, 2 @ telescoping ends
- Telescoping beam ends include 2.5" x 5" handles
- Max Hook Spread: 240"
- Additional spreads at 12" intervals to minimum spread of 144"
- 46" Fork "out to out" centered on beam
- Fork Pockets: 7" W x 3.5" T x 32" L
- Fork pockets include Retaining pins with wire lock pins
- Hook pick point to end of forks to swivel hook: 24"
- Headroom: 14.71"
- Estimated Weight: 1,010 lbs.
- Labeling to include: "Symmetrical Loading" Load chart for adjustment positions
- Center of Gravity: X = 22.42", Y = 2.52"

Capacity of lift truck and attachment combination may be less than the capacity shown on attachment.

DESCRIPTION

The telescoping fork beam only supports loads up to its rated capacity when loaded correctly. The telescoping, fork beam is a lift truck load supporting attachment designed for specific tasks withstanding forces based on the unit's rated capacity. Contract your lift truck manufacturer for written approval to attach and use the telescoping, fork beam with your lift truck, requesting the lift truck's rated capacity with attachment.

This manual contains important information to help you install, operate, maintain, and service your lifter from The Caldwell Group. We recommend that you study its contents thoroughly before putting the lifter into use. Read "General Lifting Safety Information." Then, through proper installation, application of correct operating procedures, and by practicing the recommended maintenance suggestions, you can expect maximum lifting service from your lifter.

When ordering replacement parts from this manual, it will be necessary that you include the model number and serial number with your order. This information has been provided in the front cover of this manual and on the lifter nameplate. Also include the item part number (if available) and quantity.

The contents of this manual are general in nature, and may cover features not incorporated on your lifter; therefore, the user must exercise care in applying instructions given in this manual. If specific information not in this manual is required, contact the factory by phone (800) 628-4263 or fax (815) 229-5686.

Service conditions have an important influence on the life of the wearing parts such as gears, bearings, pins, and electrical equipment. This must be considered when determining maintenance and inspection intervals to assure maximum life and safety.

The following information, data, and recommendations are not intended to, and do not in any way, limit the ingenuity or prerogative of the user to employ generally accepted maintenance and operating standards. Rather, this manual is intended only to provide guidelines and suggestions recommended for maintaining and operating this lifter.

SAFETY INFORMATION

GENERAL

Protect all authorized, qualified persons responsible for installation, operations, and inspection of your lifter from serious injury or death.

The owner or user is responsible for providing all proper devices, tools, and methods that are necessary to effectively protect each employee from recognized hazards, during installation, operation, maintenance, or servicing. The safety precautions stated in this manual are not all inclusive. The owner/user is responsible for understanding and acting according to industry standards and regulations and any other applicable local, city, state, or federal regulations.

TRAINING

Authorized, qualified individuals need comprehensive training in the use of protective equipment, safeguards, and safe operation of this equipment. Permit only authorized, qualified people to operate, maintain, and service your lifting equipment.

PERSONAL PROTECTION

Personal protective equipment is required whenever there are hazards that can do bodily harm through physical contact. The construction requirements of all personal protective equipment must be concurrent to the work performed.

The Caldwell Group accepts no responsibility or liability for any of its products that are improperly used. The safety information in this manual is provided as a guide for the user, and is not a substitute for proper training and usage.

SAFETY INFORMATION

⚠ DANGER

DANGER indicates a hazardous situation which, if not avoided, will result in death or serious injury.

⚠ WARNING

WARNING indicates a hazardous situation which, if not avoided, **could** result in death or serious injury.

⚠ CAUTION

CAUTION, used with the safety alert symbol, indicates a hazardous situation which, if not avoided **could** result in minor or moderate injury.

This is the safety alert symbol. It is used to alert you to **potential personal** injury hazards. Obey all safety messages that follow this symbol to avoid possible injury or death.

GENERAL LIFTING SAFETY INFORMATION

⚠WARNING

Initial Inspection

A qualified person shall inspect the following before initial use

- Inspect the overall unit for signs of damage or missing parts.
- Check all fasteners for tightness.
- Test all functions for proper operation.

Use

- Verify each operator is qualified in proper lifting and rigging techniques.
- Request each operator to demonstrate proper lifting techniques using your Caldwell product.
- Inspect and test the lifter to verify everything is correct.
- Do not use a lifter labeled with an “Out of Service” tag.
- Verify the travel path or transport area is clear of people and obstructions.
- Do not allow the lifter to make any contact with any objects during loading, lifting, or transporting.
- Raise, Lower, or Transport the load only over specified areas.
- Barricade people from swing zones, fall zones, and crush zones.
- Confirm the load’s weight does not exceed your Caldwell product’s rated capacity.
- Confirm the combined weight of the load and your Caldwell product does not exceed the lift truck’s rated capacity.
- Confirm all lifting devices are free from any damages.
- Use only the hooks provided with the fork beam.
- Confirm the load’s center of gravity is centered between the forks, symmetric lifting only!

GENERAL LIFTING SAFETY INFORMATION

Use

- Inspect the lifter, verify all equipment adjustments are correct and secure, before load attachment and lifting cycle begin.
- Confirm the load is ready for the lifting or transporting.
- Lift or transport only properly balanced loads.
- Accelerate and decelerate the lifter and load slowly and smoothly.
- Avoid swinging the load, transport slowly.
- Do not drag loads along the ground.
- Do not shock or side load the lifter.
- Ensure the load can withstand forces applied by the lifter.
- Inspect the load, confirm the load is ready for lifting, making sure nothing falls from the load or lifter during loading, lifting, or transporting.
- Do not lift loads over people.
- Prohibit people from standing under a load or attachment.
- Do not lift people.
- Prohibit any person from riding on the load or lifter.
- Obey stop signals from anyone.
- Do not leave a suspended load unattended.
- Start lifting the load slowly and gently, when load cycling is complete, set the load down gently on a load supporting surface.
- Store lifters in a designated place when not in use.
- Secure written approval from The Caldwell Group before making any alterations or modifications to the lifter. Modifications without approval voids your warranty.
- Do not use a lifter with damaged or missing identification tags, product safety labels or other markings. Contact The Caldwell Group if replacements are needed.

SAFETY INFORMATION

⚠WARNING

Inspecting Practices

- An appointed person shall visually inspect the lifter on a daily, weekly, and annual schedule.
- Establish a regular inspection schedule based on severity of use and environmental conditions.

every lift inspection Visual examination by the operator before and during each lift.

frequent inspection Visual examination by operator or other designated person records not required.

Normal service…….. monthly
Heavy service……weekly to monthly
Severe service……...daily to weekly
Special or infrequent service……...qualified person recommendation

periodic inspection Visual inspection by a qualified person, keeping records for continuing evaluations.

Normal service…….. annually
Heavy service……quarterly
Severe service……...monthly
Special or infrequent service……...qualified person recommendation

Inspect for:

- All rigging used.
- Faulty operation.
- Damage, wear, deformation, cracks, or any defects on the fork beam weldments, fasteners, hooks, mechanical parts, load supporting clevises or pins, welds, and attachment points.
- Loose fasteners, shackles, lifting hooks, slings or rigging hardware.
- Structural bends, cracks, or any defect.
- Damaged, worn, or missing identification and product safety labels.

Inspection and Maintenance in this manual is only a guide for the user. Adjust inspection and maintenance schedules, according to actual environmental conditions and severity of use. If inspection reveals any damage, remove the lifter from service, tagging with an "OUT of SERVICE" tag. Contact The Caldwell Group for professional consultation and evaluation, regarding replace or repair: 815-229-5667.

TELESCOPING BEAM FORKLIFT ATTACHMENT

⚠WARNING

Before attaching and using the telescoping, fork beam:

- **Contact your lift truck manufacturer.**
- **Request written approval to use the telescoping, fork beam with your lift truck.**
- **Rated capacity on the telescoping, fork beam is only for the telescoping, fork beam.**
- **The lift truck manufacturer must provide the rated capacity for the beam and lift truck combined.**

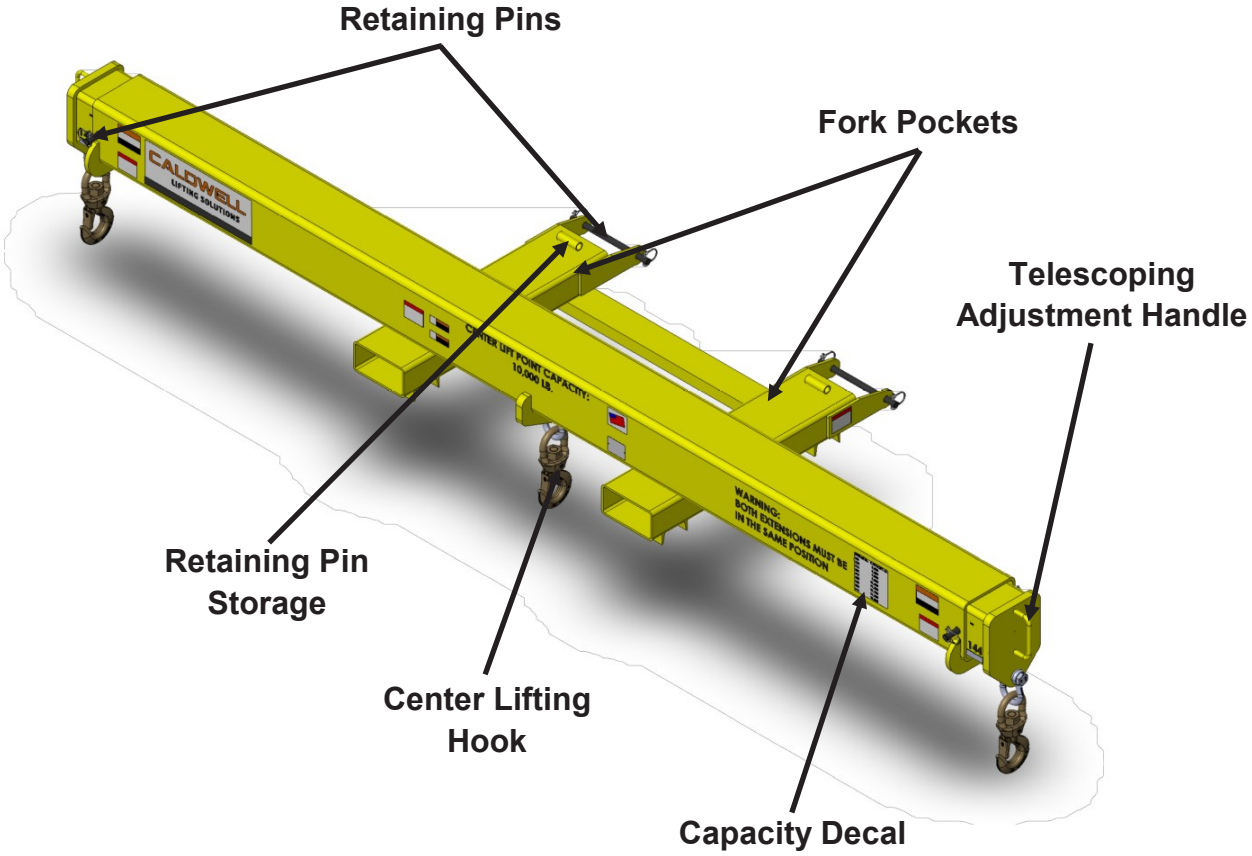

Figure 2

TELESCOPING BEAM FORKLIFT ATTACHMENT

Loading the Telescoping Fork Beam on the Lift Truck

- Lift the forks of the lift truck several inches off the floor.
- Slowly, drive the lift truck towards the back of the beam.
- Stop the lift truck.
- Slowly, adjust the height of the forks, aligning them with the fork pockets on the beam.
- Slowly, drive the lift truck forward.
- Stop the lift truck.
- Make any additional adjustments, assuring the lift truck forks are in alignment with the fork pockets.
- Remove the fork pocket retaining pins, and place them in the retaining pin storage points.
- Insert the forks into the beam fork pockets.
- Continue driving the lift truck forward until the forks are able to properly support the beam. The back side of the beam must be behind the heel of the forks.
- Insert the beam retaining pins, securing the beam to the lift truck.
- Stop the lift truck.
- Adjust the beam's spread once the beam has been lifted 3 feet off the ground.
    - Know the intended load's size and weight.
    - Determine the required spread for the intended load's size and weight (spread is defined as the center to center distance between the two lifting hooks, use only symmetric loading).
    - Remove the retaining pin and use the handle to adjust the spread. Both telescoping extensions must be adjusted symmetrically.

⚠ WARNING

- **Moving parts can crush and cut.**
- **Adjust only when unloaded.**
- **Secure all pins prior to lift.**
- **Attach load after all adjustments are secured.**
- **Perform a test lift.**

⚠ DANGER

- **Falling load will cause serious injury or death.**
- **Completely insert pin through the inner tube, before load attachment.**

LIFTING

Proper Lifting

Before attaching the load, verify the following:

- Retaining pins have properly secured the beam to the lift truck.
- Telescoping spread is adjusted for the designated load size and weight.
- Once adjusted to the desired spread, insert the retaining pins locking the beam spread into place.

- Know the weight and size of the designated load, and the maximum capacity at the selected beam spread. Capacity table found at the bottom of this page. The center lifting hook, to be used independently of the end lifting hooks, has a maximum capacity of 10,000 lbs.
- Move and securely fasten the telescoping ends, achieving the required spread, center to center between both hooks.
- Attach one sling to each hook, using only the hooks. Use only the hooks supplied with the fixed lifting boom. Select slings with a rated capacity equal to or greater than the weight of the load.
- Position the beam above the designated load.
- Slowly, lower the beam over the load for sling attachment.
- Attach both slings, one on each hook, and to the designated load.
- The load's center of gravity must be equal distance between the center of each sling, this is symmetric loading.
- Perform a test lift of several inches, verifying load security and balance; verify the lifter is level and horizontal or slightly above horizontal.

SPREAD (In Inches)	CAPACITY (In Pounds)
240	8,000
228	8,500
216	9,000
204	9,800
192	10,600
180	11,500
168	12,700
156	14,100
144	15,800

LIFTING

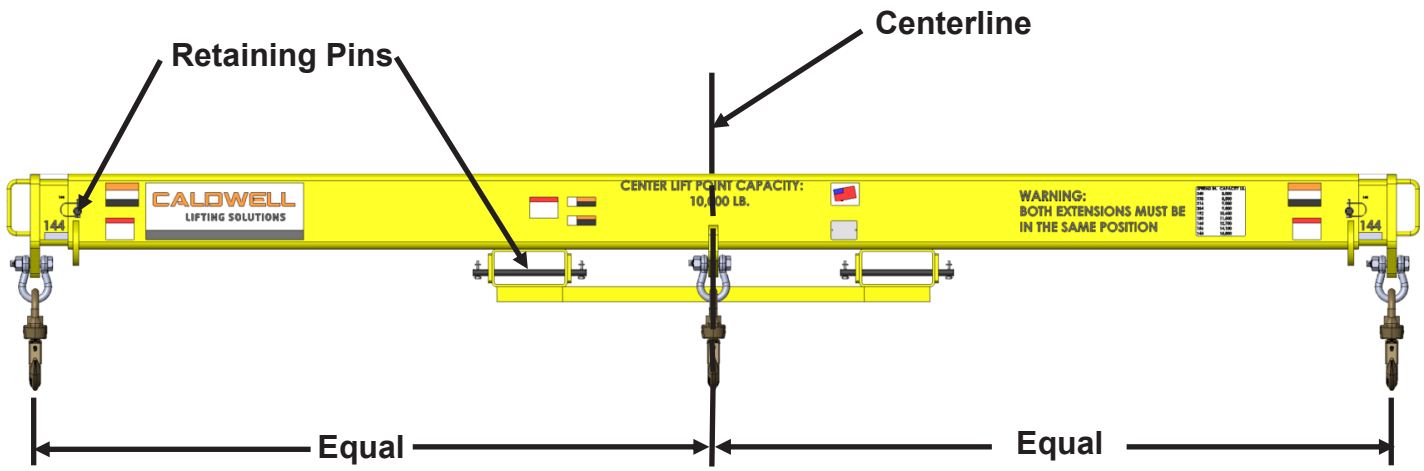

Figure 3

⚠WARNING

- **Do not drive the lift truck forward when the boom, loaded or unloaded, is pointing downward.**
- **Do not lift or transport an asymmetric load.**
- **Do not lift or transport a load oblique to horizontal, (slanted).**

Recommended Spare Parts

Description	Part Number	Quantity per Unit
5.4 T Swivel Hook with Latch	113852	3
4.75T Bolt Type Anchor Shackle	113901	3
Retaining Pin	15-0392	4
Wire Lock Pin	115971	8

ASSEMBLY DRAWING

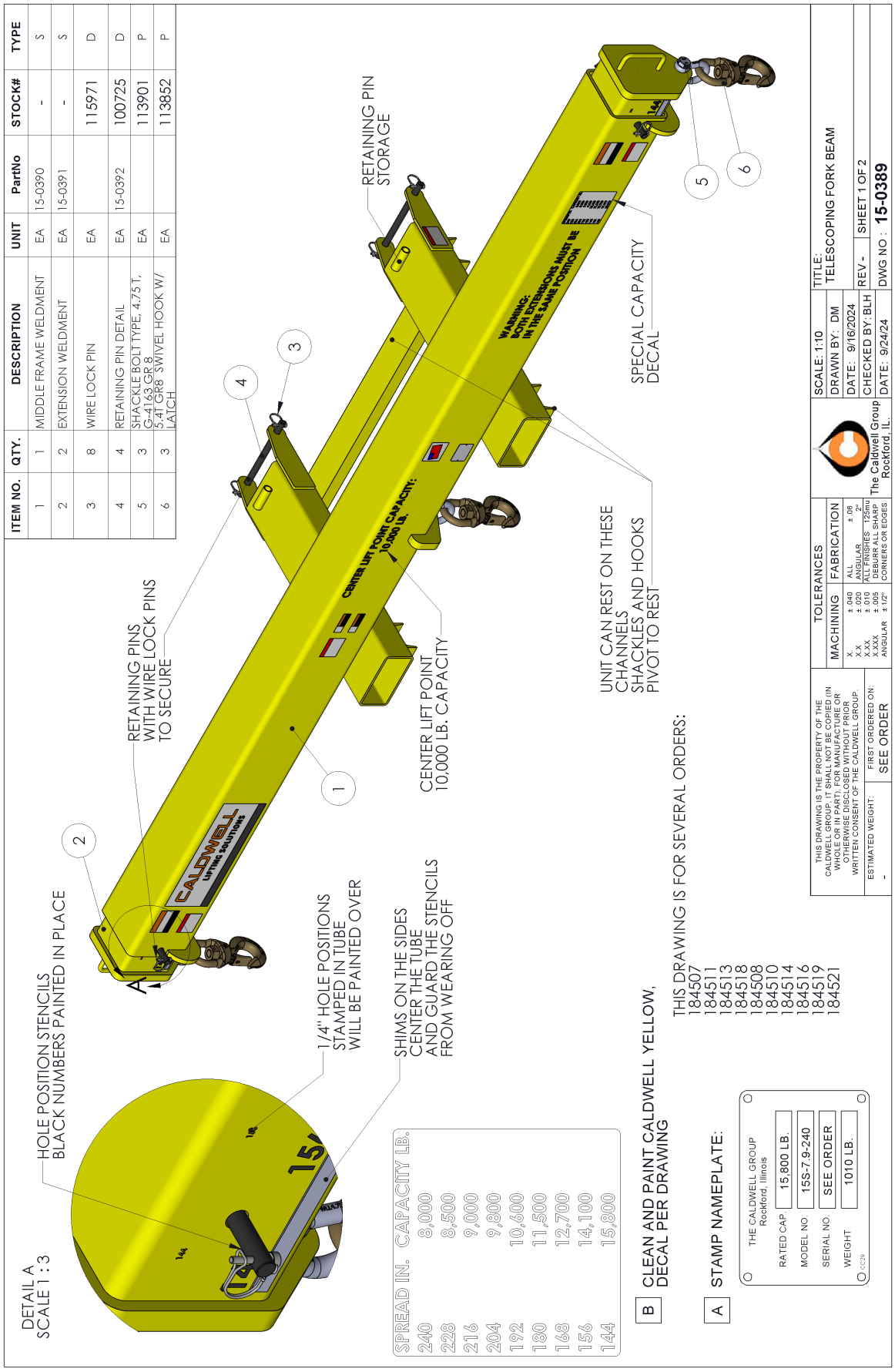

ASSEMBLY DRAWING

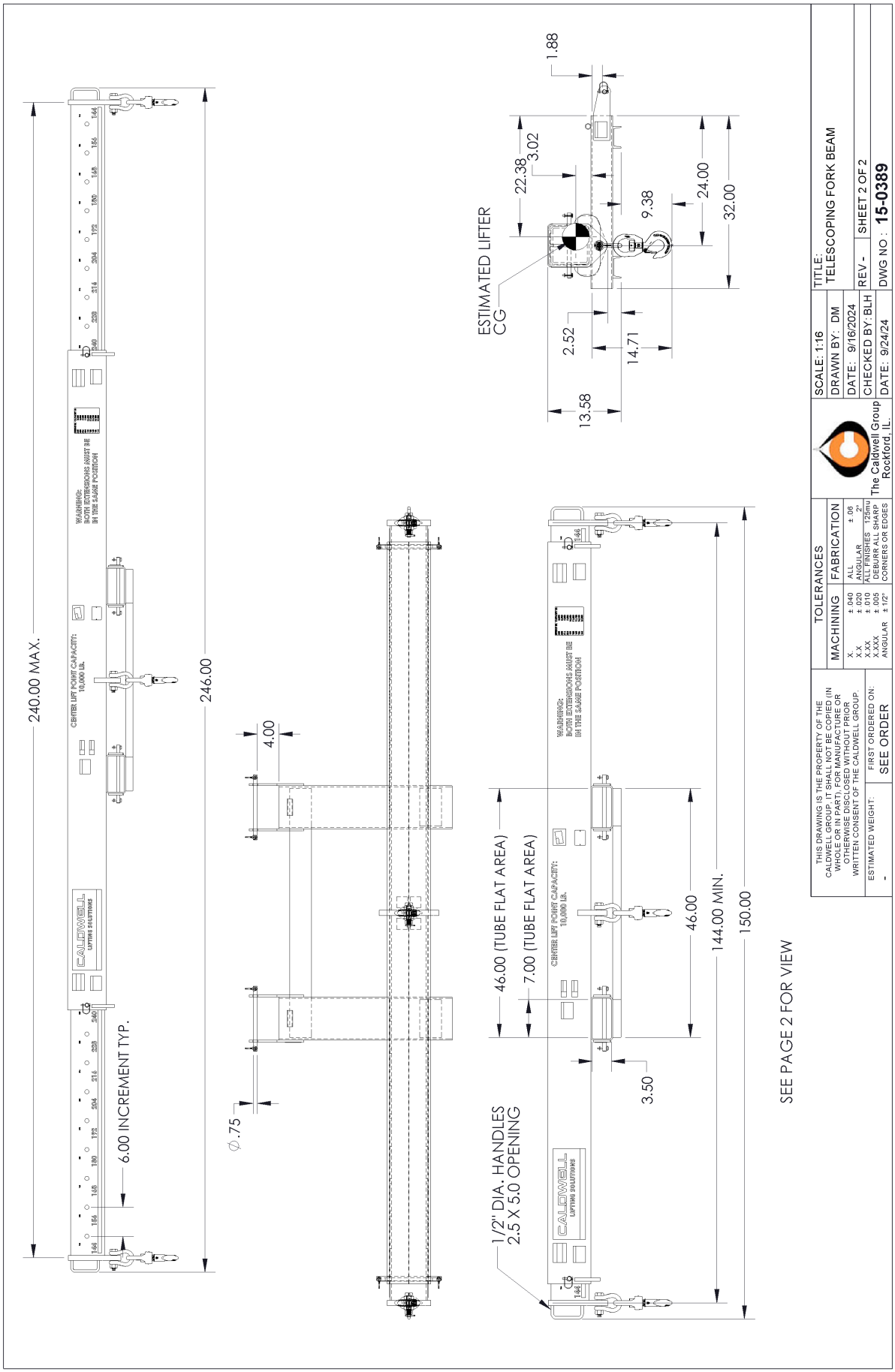

CALDWELL
LIFTING SOLUTIONS

The Caldwell Group
4080 Logistics Pkwy
Rockford, IL 61109

P.O. Box 6005
Rockford, IL 61109

800.628.4263
815.229.5667

815.229.5686 fax
caldwellinc.com